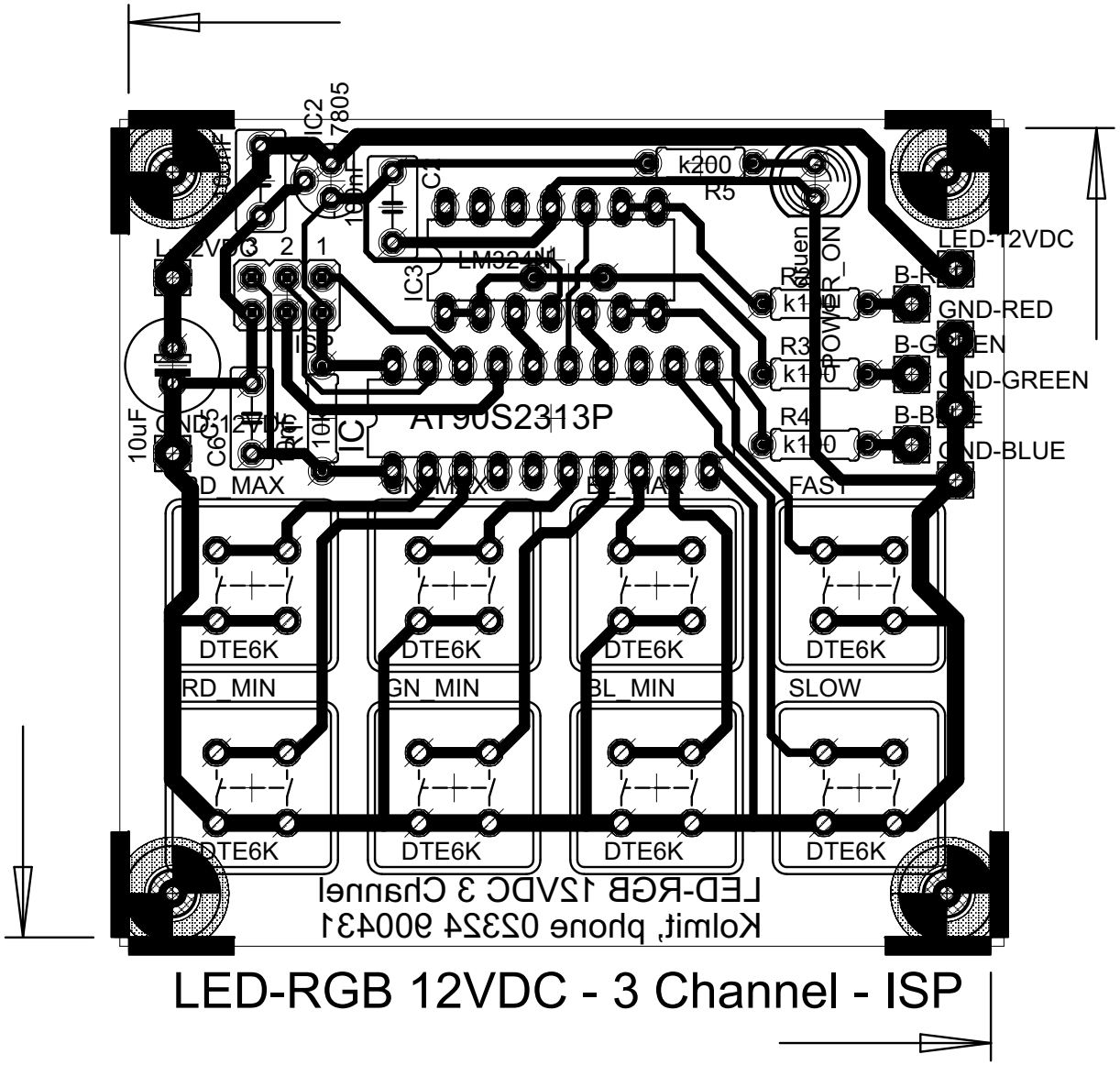

LED-RGB 12VDC - 3 Channel - ISP