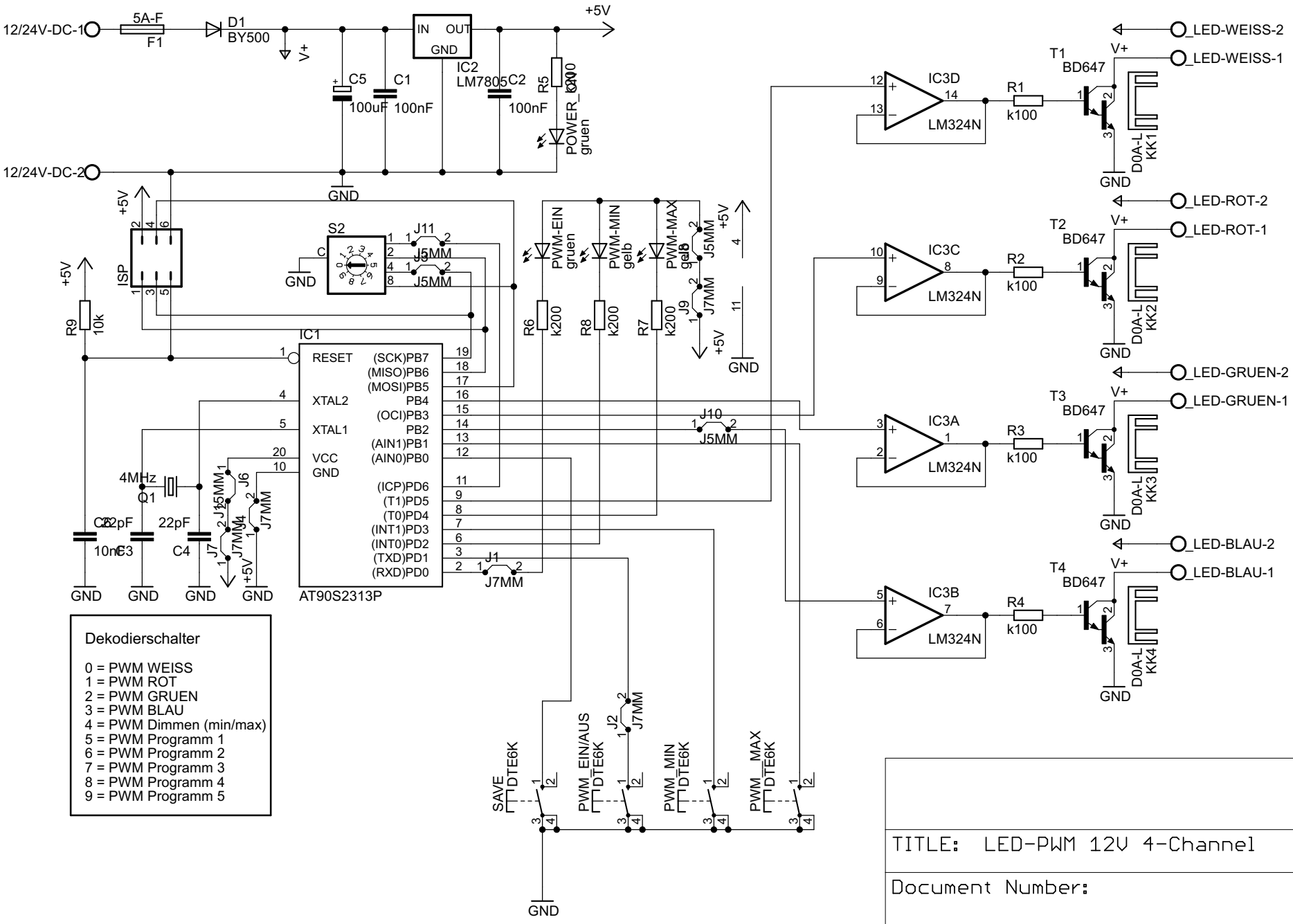
12/24V-DC-1
5A-F
F1
D1
BY500
V+
C5
100uF
C1
100nF
IC2
LM7805
IN
OUT
GND
C2
100nF
+5V
R5
k200
POWER_k200
gruen
12/24V-DC-2
GND
ISP
R9
10k
S2
J11
J5MM
PWM-EIN
gruen
PWM-MIN
gelb
PWM-MAX
gelb
R6
k200
R8
k200
R7
k200
J9
J7MM
IC1
RESET
XTAL2
XTAL1
VCC
GND
(SCK)PB7
(MISO)PB6
(MOSI)PB5
PB4
(OCI)PB3
PB2
(AIN1)PB1
(AIN0)PB0
(ICP)PD6
(T1)PD5
(T0)PD4
(INT1)PD3
(INT0)PD2
(TXD)PD1
(RXD)PD0
AT90S2313P
J10
J1
4MHz
Q1
C2
22pF
C3
10nF
C4
22pF
J6
J7
IC3D
IC3C
IC3A
IC3B
LM324N
R1
R2
R3
R4
k100
T1
T2
T3
T4
BD647
D0A-L
KK1
KK2
KK3
KK4
_LED-WEISS-2
_LED-WEISS-1
_LED-ROT-2
_LED-ROT-1
_LED-GRUEN-2
_LED-GRUEN-1
_LED-BLAU-2
_LED-BLAU-1
SAVE
DTE6K
PWM_EIN/AUS
PWM_MIN
PWM_MAX
J2
Dekodierschalter
0 = PWM WEISS
1 = PWM ROT
2 = PWM GRUEN
3 = PWM BLAU
4 = PWM Dimmen (min/max)
5 = PWM Programm 1
6 = PWM Programm 2
7 = PWM Programm 3
8 = PWM Programm 4
9 = PWM Programm 5
TITLE: LED-PWM 12V 4-Channel
Document Number:
REV:
Date: 13.12.2008 00:48:44
Sheet: 1/1