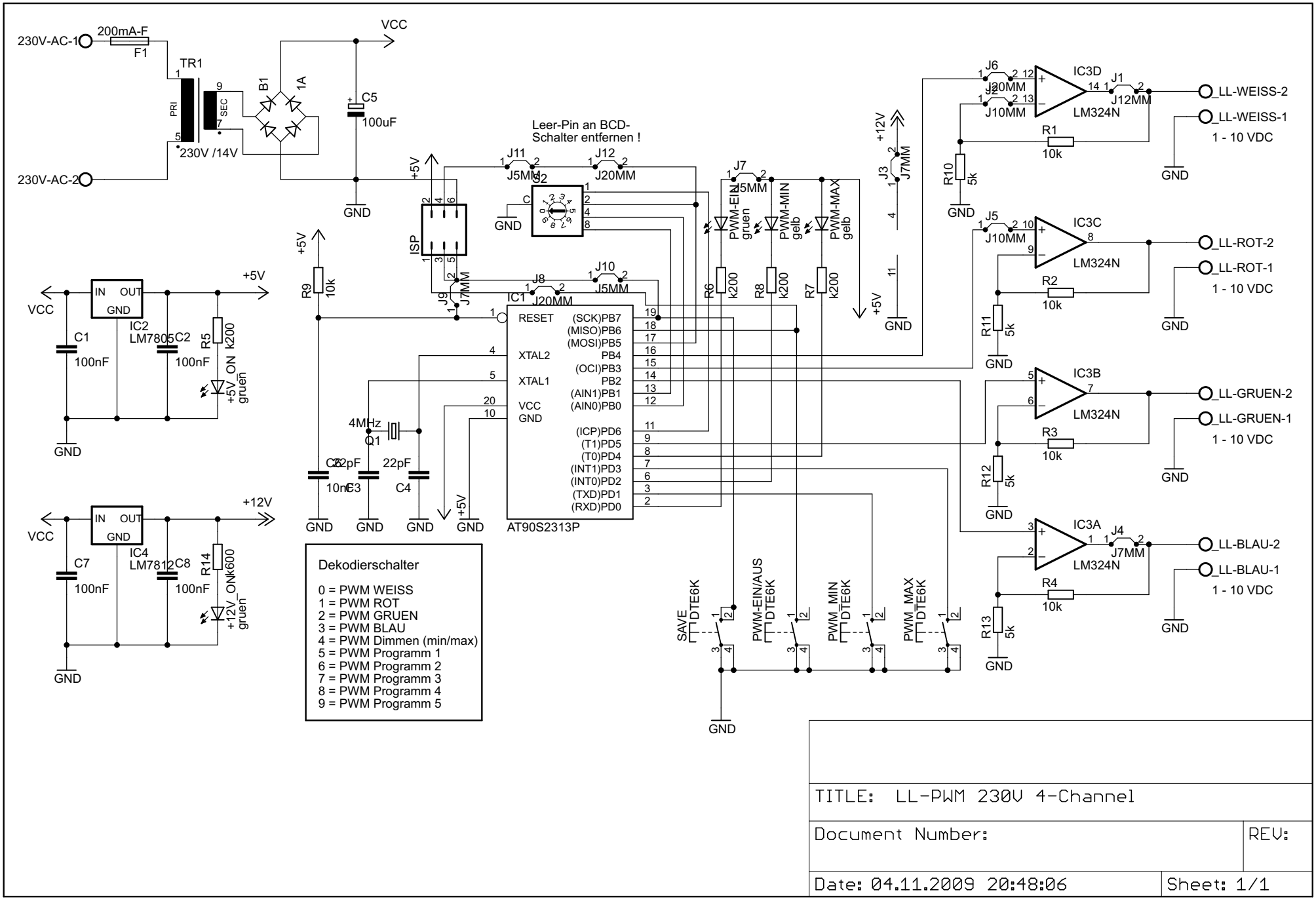
230V-AC-1
200mA-F
F1
TR1
PRI
SEC
230V /14V
230V-AC-2
B1
1A
VCC
C5
100uF
GND
+5V
ISP
J7MM
J9
Leer-Pin an BCD-
Schalter entfernen !
J11
J5MM
J12
J20MM
S2
J8
J10
J5MM
J20MM
IC1
RESET
XTAL2
XTAL1
VCC
GND
(SCK)PB7
(MISO)PB6
(MOSI)PB5
PB4
(OCI)PB3
PB2
(AIN1)PB1
(AIN0)PB0
(ICP)PD6
(T1)PD5
(T0)PD4
(INT1)PD3
(INT0)PD2
(TXD)PD1
(RXD)PD0
AT90S2313P
R9
10k
4MHz
Q1
C2
10nF
C3
22pF
C4
22pF
IN
OUT
GND
IC2
LM7805
C1
100nF
C2
100nF
R5
k200
+5V_ON
gruen
IC4
LM7812
C7
100nF
C8
100nF
R14
k600
+12V_ON
gruen
+12V
J7
J5MM
PWM-EIN
gruen
PWM-MIN
gelb
PWM-MAX
gelb
R6
k200
R8
k200
R7
k200
J3
J7MM
J6
J20MM
J2
J10MM
J1
J12MM
IC3D
LM324N
R1
10k
R10
5k
_LL-WEISS-2
_LL-WEISS-1
1 - 10 VDC
J5
J10MM
IC3C
LM324N
R2
10k
R11
5k
_LL-ROT-2
_LL-ROT-1
1 - 10 VDC
IC3B
LM324N
R3
10k
R12
5k
_LL-GRUEN-2
_LL-GRUEN-1
1 - 10 VDC
IC3A
LM324N
J4
J7MM
R4
10k
R13
5k
_LL-BLAU-2
_LL-BLAU-1
1 - 10 VDC
SAVE
DTE6K
PWM-EIN/AUS
DTE6K
PWM_MIN
DTE6K
PWM_MAX
DTE6K
Dekodierschalter
0 = PWM WEISS
1 = PWM ROT
2 = PWM GRUEN
3 = PWM BLAU
4 = PWM Dimmen (min/max)
5 = PWM Programm 1
6 = PWM Programm 2
7 = PWM Programm 3
8 = PWM Programm 4
9 = PWM Programm 5
TITLE: LL-PWM 230V 4-Channel
Document Number:
REV:
Date: 04.11.2009 20:48:06
Sheet: 1/1